Western Products, PO Box 245038, Milwaukee, WI 53224-9538 • www.westernplows.com

July 15, 2026
Lit. No. 43762, Rev. 15

Hopper and Drive Components

Striker® Hopper Spreader with Electric Motors

#99030-1, 99031-1, 99035-1, 99039-1

Parts List

This Parts List is for WESTERN® Striker hopper spreaders with serial numbers beginning with 170711 and higher.

A DIVISION OF DOUGLAS DYNAMICS, LLC

HOPPER COMPONENTS

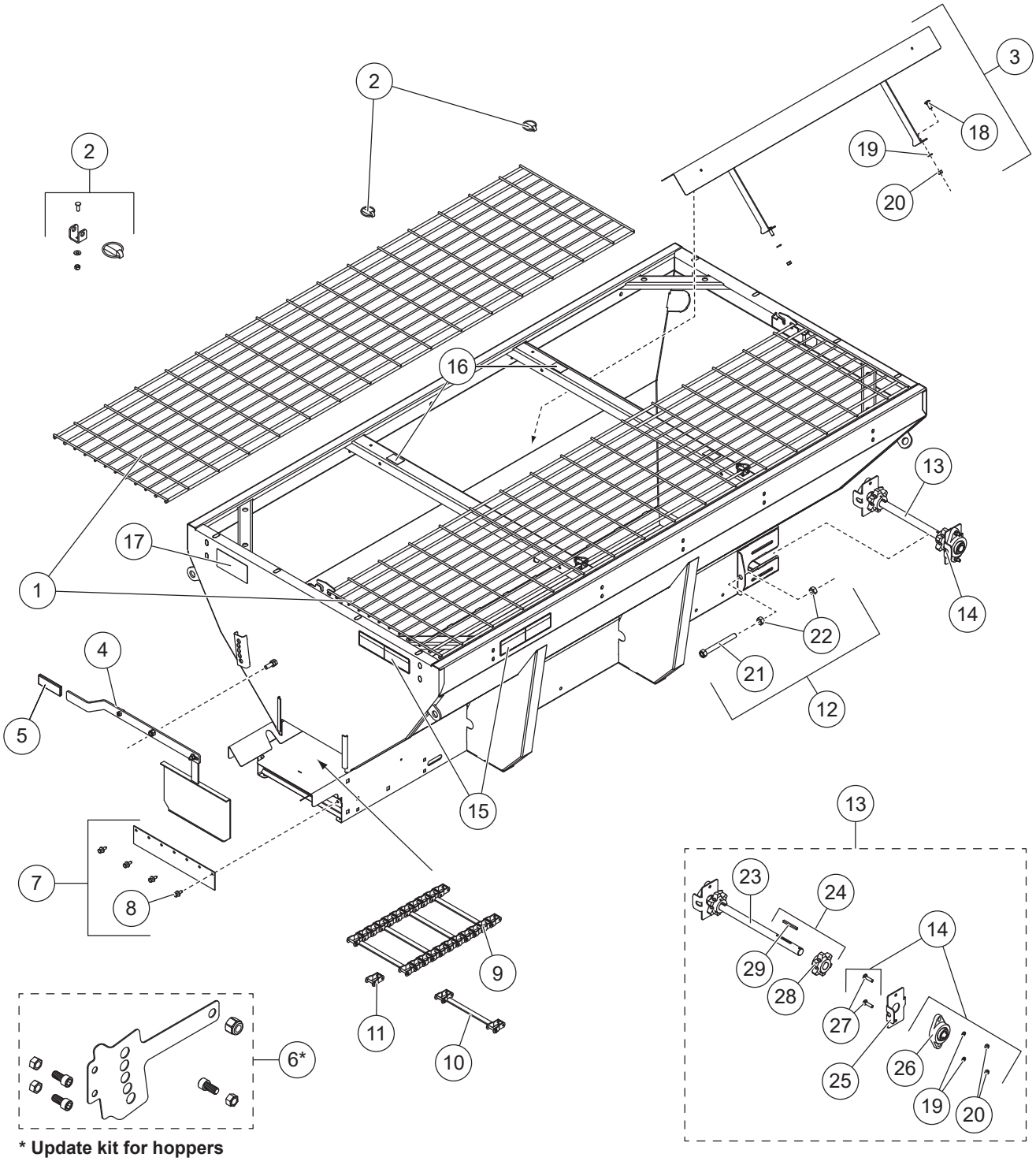

*** Update kit for hoppers without a feed gate lock bracket.**

Hopper Components							
Item	**Part**	**Qty**	**Description**	**Item**	**Part**	**Qty**	**Description**
1	99515	2	Top Screen – 7'	9	68474	1	Pintle Chain (123 links) 9' Hopper
	99516	2	Top Screen – 8'		94898	1	Pintle Chain (108 links) 7' & 8' Hoppers
	99517	2	Top Screen – 9' Narrow (3.0 yd^3)	10	68492	1	Conveyor Repair Bar w/Pins & Cotters
	99518	2	Top Screen – 9' Wide (4.5 yd^3)	11	68475	1	Conveyor Repair Link w/Pins & Cotters
2	99578	1	Screen Attachment Kit (set of 4)	12	99073	2	Tensioner Bolt Kit
3	99482	1	Inverted V Kit – 7' & 8' Hoppers	13	99480	1	Idler Shaft Assembly Kit
	99119	1	Inverted V Kit – 9' Hopper	14	94953	2	Spreader Bearing Kit
4	99083	1	Feed Gate Assembly	15	31594EN	2	Label – Warning/Caution, Spreaders
5	90817	1	Rubber Grip, Feed Gate Handle	16	67272	4	Label – Caution, Do Not Lift
6*	90952	1	Feed Gate Update Kit	17	11100	1	Label – Warning, Rear Camera
7	78266	1	Wiper Replacement Kit	ns	68790	1	Ratchet Straps Kit (pkg of 4)
8	99079	1	Rivet Kit, Steel Hopper Wiper (pkg of 4)				
Item 3			**99482 (7' & 8' hoppers) / 99119 (9' hoppers) Inverted V Kits**				
18		4†	3/8-16 x 1 Carriage Bolt SS	20		8‡	3/8-16 Hex Nut SS
19		8‡	3/8 Lock Washer SS	–		1	Inverted V
Item 12			**99073 Tensioner Bolt Kit**				
21		1	5/8-11 x 6 Take-Up Bolt	22		2	5/8-11 Hex Nut
Item 13			**99480 Idler Shaft Assembly Kit**				
14	94953	2	Spreader Bearing Kit	24	99479	2	6-Tooth Sprocket
23	94351	1	Idler Shaft	25	99765	2	Bearing Alignment Plate
Item 14			**94953 Spreader Bearing Kit**				
19		2	3/8 Lock Washer SS	26	94536	1	Bearing 1.125 ID 2-Bolt Flange
20		2	3/8-16 Hex Nut SS	27		2	3/8-16 x 1-1/2 Carriage Bolt SS
Item 24			**99479 6-Tooth Sprocket**				
28		1	Drive Sprocket 6T	29	95076	1	1/4 x 2-3/4 Machine Key
SS = Stainless Steel			ns = not shown				G = Grade

* Update kit required when installing replacement feed gate on hoppers without an existing lock bracket.

† Qty 6 for 9' hopper.

‡ Qty 10 for 9' hopper.

Labels – Striker & WESTERN® Logos							
				Application			
Item	**Part**	**Qty**	**Description**	**7' (1.5 yd^3)**	**8' (2.0 yd^3)**	**9' (3.0 yd^3)**	**9' (4.5 yd^3)**
ns	96997	2	Side Logo – Striker, Small	■	■		■
ns	96999	2	Side Logo – Striker, Large			■	
ns	96996	1	Rear Logo – WESTERN, Small	■	■		
ns	96998	1	Rear Logo – WESTERN, Large			■	■
ns = not shown							

CONVEYOR DRIVE COMPONENTS

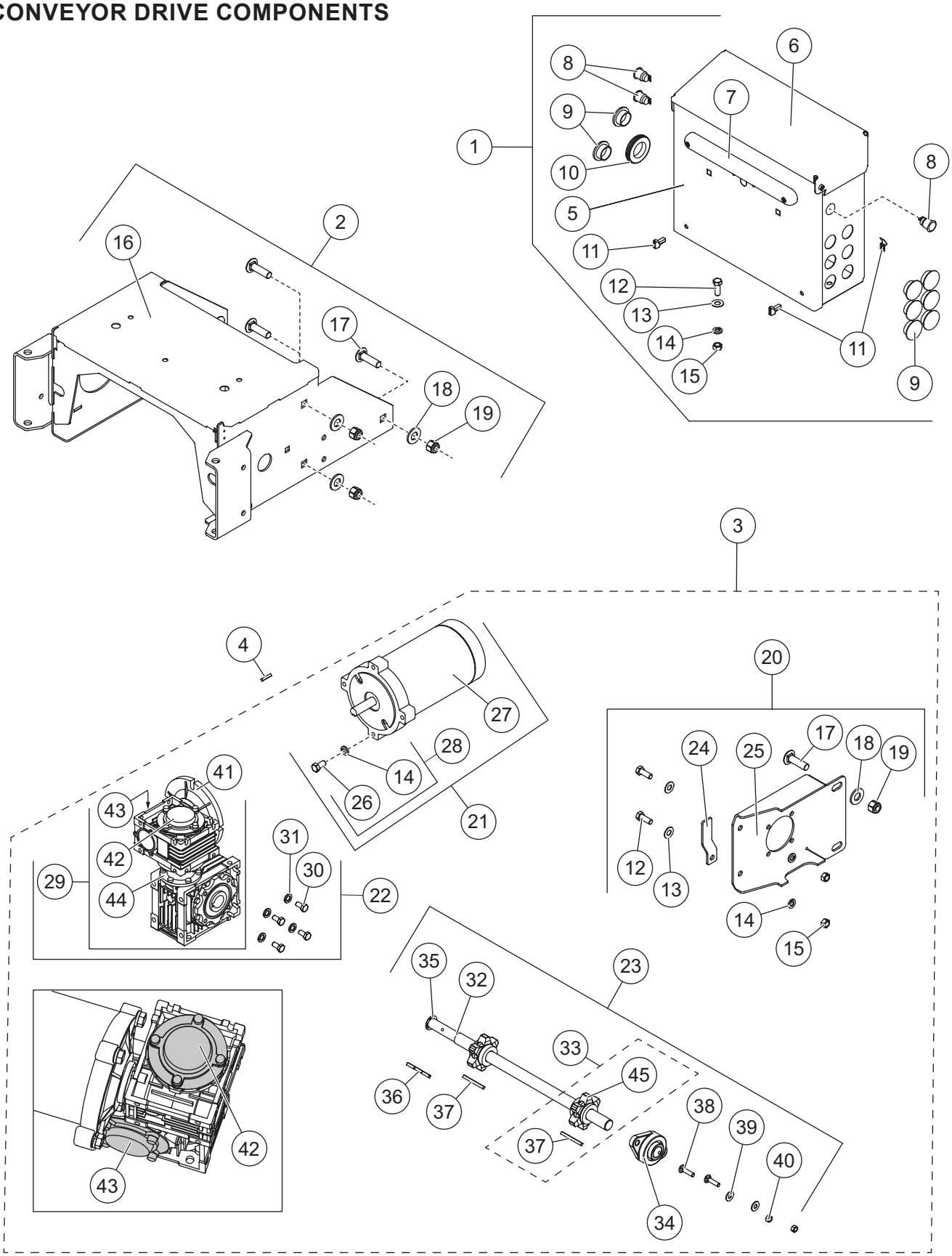

Conveyor Drive Components							
Item	**Part**	**Qty**	**Description**	**Item**	**Part**	**Qty**	**Description**
1	99077	1	Electrical Box Assembly	4	65195	1	3/16 x 1 Machine Key
2	99092	1	Electric Power Group Mount Kit	ns	99744	1	Label Kit, SH Electrical Control Box
3	99091	1	Electric Conveyor Drive Kit				
Item 1			**99077 Electrical Box Assembly**				
5	99696	1	Electrical Box	11	99570	1	Electrical Box Latch Kit (pkg of 2)
6	99247	1	Enclosure Cover	12		3	3/8-16 x 1 Hex Cap Screw SS
7	99080	1	CHMSL Kit	13		3	3/8 Flat Washer SS
8	99254	3	Switch, Push Button	14		3	3/8 Lock Washer SS
9	99195	8	Break-Thru Plug	15		3	3/8-16 Hex Nut SS
10		1	0.25 Grommet				
Item 2			**99092 Electric Power Group Mount Kit**				
16	99569	1	Electric Power Group Mount	18		6	1/2 Flat Washer SS
17		6	1/2-13 x 1-3/4 Carriage Bolt SS	19		6	1/2-13 Locknut SS
Item 3			**99091 Electric Conveyor Drive Kit**				
20	99089	1	Gear Box Bracket Kit	22	31549	1	Gear Box Kit
21	99085	1	Conveyor Motor Kit	23	99094	1	Drive Shaft Kit, Electric
Item 20			**99089 Gear Box Bracket Kit**				
12		2	3/8-16 x 1 Hex Cap Screw SS	18		6	1/2 Flat Washer SS
13		2	3/8 Flat Washer SS	19		6	1/2-13 Locknut SS
14		2	3/8 Lock Washer SS	24		1	Cable Boot Stand
15		2	3/8-16 Hex Nut SS	25		1	Gear Box Bracket
17		2	1/2-13 x 1-3/4 Carriage Bolt SS	ns	99775	1	Cable Boot – 8-Pin
Item 21			**99085 Conveyor Motor Kit**				
27	D6825-1	1	Motor 1/2 hp NEMA 56C	28	99086	1	Bolt Bag – Conveyor Motor
Item 22			**31549 Gear Box Kit**				
29	31098	1	Gear Box, 10 x 10 2X Worm Gear	31		4	M8 Lock Washer SS
30		4	M8 x 1.25 x 16 Hex Cap Screw SS				
Item 23			**99094 Drive Shaft Kit, Electric**				
32		1	Drive Shaft	37		2	1/4 x 2-3/4 Machine Key
33	99479	2	6-Tooth Sprocket Kit	38		2	3/8-16 x 1-1/2 Carriage Bolt SS
34	94536	1	Bearing, 1.125 ID 2-Bolt Flange	39		2	3/8 Flat Washer,Type A Wide SS
35	330	1	1" Retaining Ring	40		2	3/8-16 Hex Nut SS
36	99572	1	1/4 x 3 Machine Key	ns		2	3/8 Lock Washer SS
Item 28			**99086 Bolt Bag – Conveyor Motor**				
14		2	3/8 Lock Washer SS	26		4	3/8-16 x 3/4 Hex Cap Screw SS
Item 29			**31098 Gear Box 10 x 10 2X Worm Gear**				
41	31101	1	Motor Flange	43	86799	1	Gear Box Cover Kit, Secondary
42	86792	1	Gear Box Cover Kit, Primary	44	31102	1	Connector Flange
Item 33			**99479 6-Tooth Sprocket**				
37		1	1/4 x 2-3/4 Machine Key	45		1	Drive Sprocket 6T
SS = Stainless Steel				ns = not shown			M = Metric

CHUTE ASSEMBLY COMPONENTS

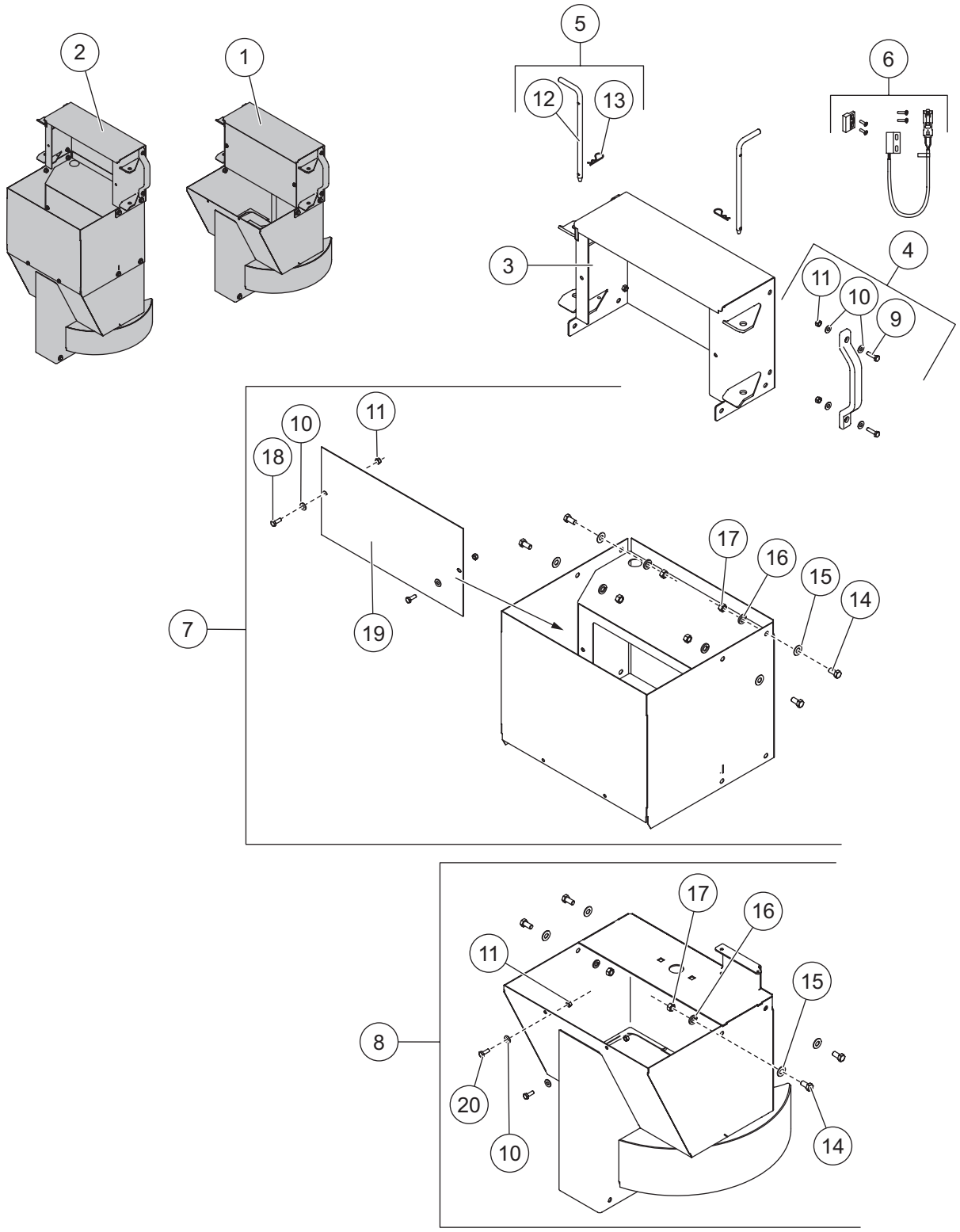

Chute Assembly							
Item	**Part**	**Qty**	**Description**	**Item**	**Part**	**Qty**	**Description**
1*	99132	1	Short Chute Assembly – Complete	5	99613	1	Chute Attachment Kit
2*	99096	1	Long Chute Assembly – Complete	6	99568	1	Magnetic Chute Interlock Kit
3	96386	1	Chute Upper Section	7†	99139	1	Chute Middle Section Kit
4	99098	2	Handle Kit	8	99137	1	Chute Lower Section Kit
Item 4			**99098 Handle Kit**				
9		2	1/4-20 x 1-1/4 Hex Cap Screw SS	11		2	1/4-20 Locknut GB SS
10		4	1/4 Flat Washer SS				
Item 5			**99613 Chute Attachment Kit**				
12		2	1/2 x 8-1/4 Chute Pin	13		2	3/32 x 2-1/4 Cotter Pin
Item 7			**99139† Chute Middle Section Kit**				
–		1	Chute Extension, Electric	16		4	3/8 Lock Washer SS
10		2	1/4 Flat Washer SS	17		4	3/8-16 Hex Nut SS
11		2	1/4-20 Locknut GB SS	18		2	1/4-20 x 3/4 Hex Cap Screw
14		4	3/8-16 x 3/4 Hex Cap Screw SS	19	99207	1	Chute Motor Cover
15		4	3/8 Flat Washer SS				
Item 8			**99137 Chute Lower Section Kit**				
–		1	Lower Chute Body	15		4	3/8 Flat Washer SS
10		2	1/4 Flat Washer SS	16		4	3/8 Lock Washer SS
11		2	1/4-20 Locknut GB SS	17		4	3/8-16 Hex Nut SS
14		4	3/8-16 x 3/4 Hex Cap Screw SS	20		2	1/4-20 x 3/4 Hex Cap Screw SS
			SS = Stainless Steel				G = Grade

* Includes spinner and shutter assemblies shown on following page.

† Not used in the 99132 short chute assembly.

SPINNER DRIVE & SHUTTER ASSEMBLIES

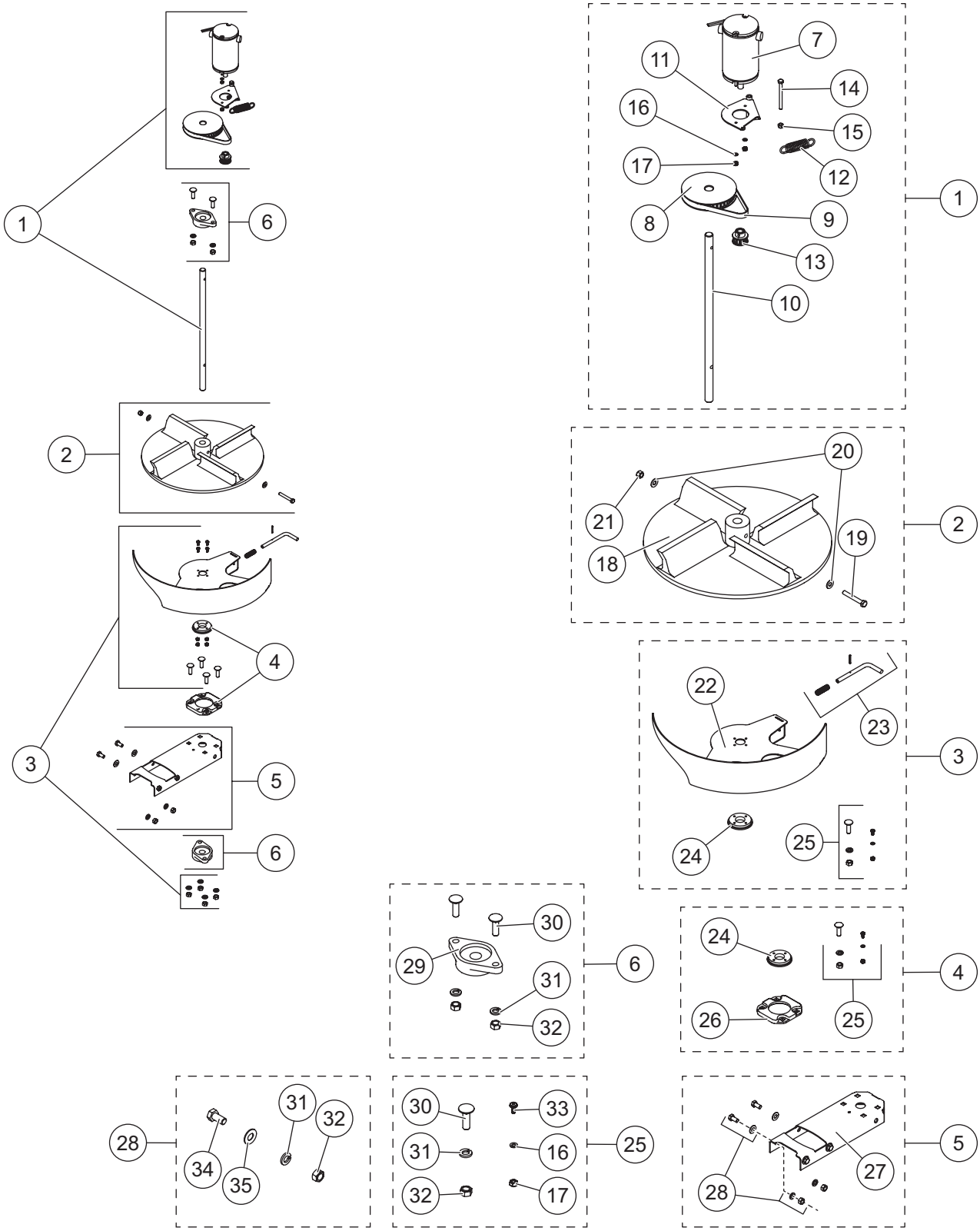

Spinner Drive & Shutter Assemblies							
Item	**Part**	**Qty**	**Description**	**Item**	**Part**	**Qty**	**Description**
1	96506	1	Chute Drive Service Kit	4	96504	1	Chute Shutter Bearing Kit
2	99485	1	Poly Spinner Kit	5	96392	1	Shutter Bearing Support Kit
3	99135	1	Shutter Replacement Kit	6	96501	2	Bearing Kit
Item 1			**96506 Chute Drive Service Kit**				
7	93200*	1	Motor 12V 1/3-hp	13	76795	1	10-Tooth Pulley, Drive Gear
8	76796	1	40-Tooth Cogged Belt Pulley 3/4 Bore	ns	99614	1	Bolt Bag – Chute Service Kit
9	M1355	1	Spinner Drive Belt	14		1	1/4-20 x 3 Hex Cap Screw SS
10	99228	1	Spinner Shaft	15		1	1/4-20 Locknut GB SS
11	80028	1	Spinner Motor Tensioner Plate	16		2	#10 Flat Washer SS
12	99776	1	Spinner Motor Spring SS	17		2	#10-32 Locknut GB SS
Item 2			**99485 Poly Spinner Kit**				
18		1	Spinner, Black Poly – CW Rotation	20		2	5/16 Flat Washer SS
19		1	5/16-18 x 2-1/4 Hex Cap Screw SS	21		1	5/16-18 Locknut GB SS
Item 3			**99135 Shutter Replacement Kit**				
22		1	Chute Shutter	24		1	Chute Shutter Bearing – Inner
23	96505	1	Shutter Lock Pin Kit	25	99615	1	Bolt Bag – Shutter
Item 4			**96504 Chute Shutter Bearing Kit**				
24		1	Chute Shutter Bearing – Inner	26		1	Chute Shutter Bearing – Outer
25	99615	1	Bolt Bag – Shutter				
Item 5			**96392 Shutter Bearing Support Kit**				
27		1	Chute Lower Bearing Support	28	96529	1	Bolt Bag – Shutter Bearing Support
Item 6			**96501 Bearing Kit**				
29	96167	1	Pillow Block Bearing 3/4 Bore	31		2	3/8 Lock Washer SS
30		2	3/8-16 x 1-1/4 Carriage Bolt	32		2	3/8-16 Hex Nut SS
Item 25			**99615 Bolt Bag – Shutter**				
16		4	#10 Flat Washer SS	31		4	3/8 Lock Washer SS
17		4	#10-32 Locknut GB SS	32		4	3/8-16 Hex Nut SS
30		4	3/8-16 x 1-1/4 Carriage Bolt	33		4	#10-32 x 1/2 #2 Pan Head Screw SS
Item 28			**96529 Bolt Bag – Shutter Bearing Support**				
31		4	3/8 Lock Washer SS	34		4	3/8-16 x 3/4 Hex Cap Screw SS
32		4	3/8-16 Hex Nut SS	35		4	3/8 Flat Washer SS
SS = Stainless Steel			ns = not shown				G = Grade

* Requires 80028 Spinner Motor Tensioner Plate if purchasing 93200 to replace 93100.

ELECTRICAL COMPONENTS

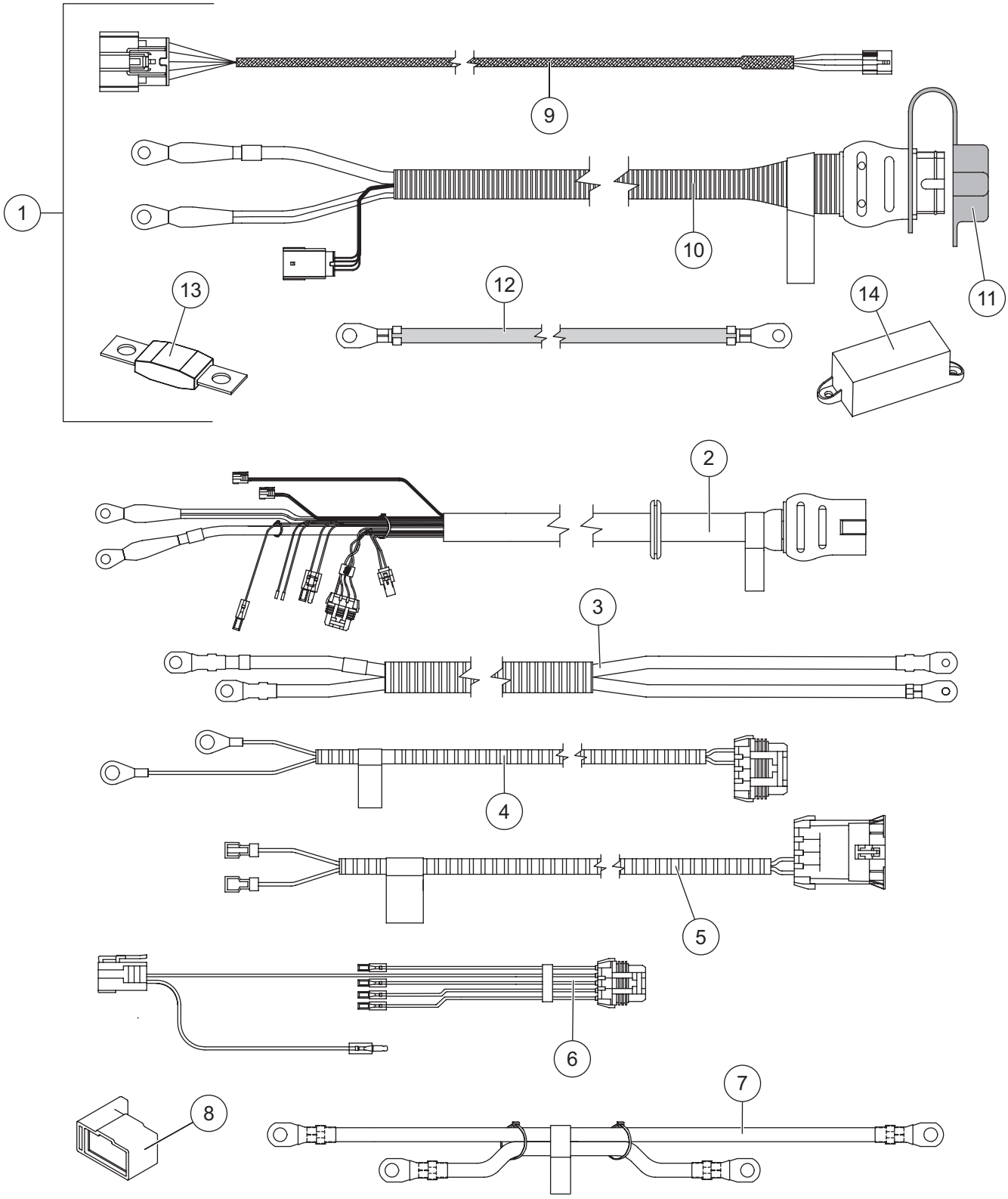

ELECTRICAL BOX COMPONENTS

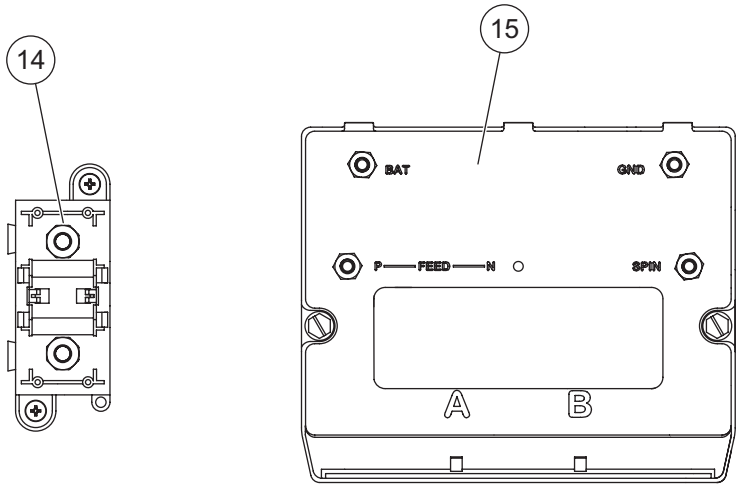

Cables & Harnessing, Electrical Components							
Item	**Part**	**Qty**	**Description**	**Item**	**Part**	**Qty**	**Description**
1	78402	1	Vehicle-Side Harness Kit	6	69939	1	10-Pin Connector w/Switch Connector
2	69906	1	Hopper Harness Assembly				
3	78987	1	Conveyor Motor Cable	7	78385	1	Cable – Module to Isolated Stud Block
4	78361	1	Cable Assembly, 20" – Spinner Motor	8	69916	1	8-Pin Cable Boot
5	78359	1	Cable Assy, Spinner Motor – Chute	ns	99772	1	Motor Terminal Cover Kit (pkg of 2)
Item 1			**78402 Vehicle-Side Harness Kit**				
9	69902	1	Vehicle Control Harness	13	95836	1	Fuse, 100A
10*	76057	1	Vehicle Harness Assembly	14	95837	1	Fuse Holder/Isolated Stud Block
11	99759	1	Plug Cover	ns		6	HD Cable Tie, 25.25"
12	22511	1	22" Battery Cable – Red	ns		10	Cable Tie, 5.35"
Electrical Box Components							
14	95837	1	Fuse Holder/Isolated Stud Block	15	52385	1	Spreader Module 4-Post
ns = not shown							

* Includes the plug cover (item 11).

CAB CONTROL

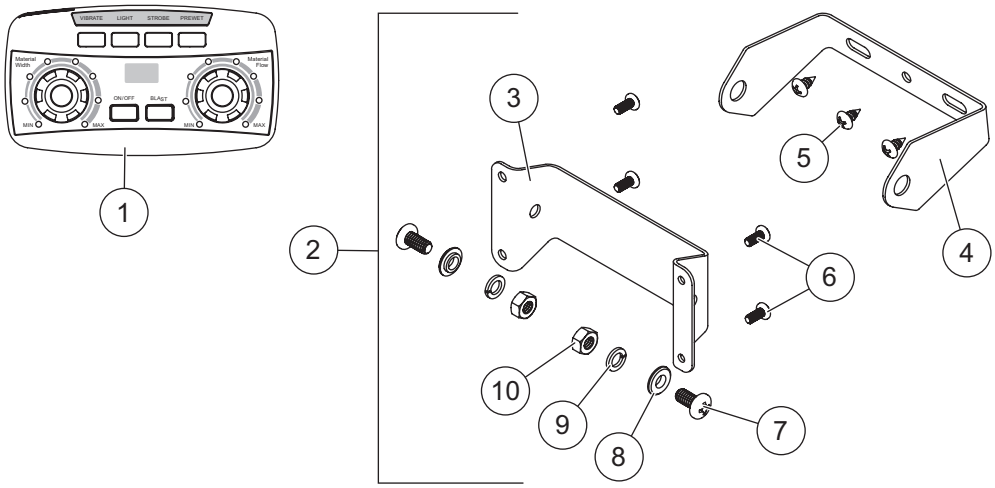

99534 Cab Control Kit							
Item	**Part**	**Qty**	**Description**	**Item**	**Part**	**Qty**	**Description**
1	99774	1	Cab Control 2-Knob	2	52345	1	Cab Control Bracket Kit
Item 2			**52345 Cab Control Bracket Kit**				
3		1	Control Bracket, Inner	7		2	1/4-20 x 1/2 Pan Head Machine Screw SS – Black Oxide
4		1	Control Bracket, Outer				
5		3	#10 x 3/8 Tapping Screw SS	8		2	1/4 Shoulder Washer – Black Oxide
6		4	#8-32 x 3/8 Phillips Pan Head Machine Screw	9		2	1/4 Lock Washer SS
				10		2	1/4-20 Hex Nut G5 – Black Oxide
G = Grade				SS = Stainless Steel			

ACCESSORIES

Accessory Kits			
Part	**Description**	**Part**	**Description**
99139	Chute Middle Section/Extension Kit	78402*	Vehicle-Side Harness Kit
99686	License Plate Light Kit	99488	Hopper Side Extension Kit
99505-1	Primary Work Light Kit	92532	Truck Mount Kit, 2 Bars – 7' & 8' Hoppers
99732-1	Secondary Work Light Kit	92533	Truck Mount Kit, 3 Bars – 9' Hopper
99494-1	Strobe Light Kit	99690	Tie-Down Kit SH, Chain
76668-1	Vibrator Kit		

* Contains all vehicle-side electrical components except control.

Liquid Kits			
Part	**Description**	**Part**	**Description**
76400	Standard Pump Kit, ON-OFF System	76425	50-Gallon Tank Kit (2 x 25 gal)
76420	Deluxe Pump Kit, Full-Feature System	76450	100-Gallon Tank Kit (2 x 50 gal)
76405	Pre-Wet Pump Switch Kit		

Western Products
PO Box 245038
Milwaukee, WI 53224-9538
www.westernplows.com

A DIVISION OF DOUGLAS DYNAMICS, LLC

Copyright © 2026 Douglas Dynamics, LLC. All rights reserved. This material may not be used, reproduced, or copied in any manner, in whole or in part, in any printed, mechanical, electronic, film, or other distribution and storage media, nor analyzed or manipulated in any manner for the purpose of training artificial intelligence technologies or systems, without the written consent of Western Products. In accordance with Article 4(3) of the Digital Single Market Directive 2019/790, Western Products expressly reserves this work from the text and data mining exception. Authorization to photocopy items for internal or personal use by Western Products outlets or equipment owner is granted.

Western Products reserves the right under its product improvement policy to change construction or design details and furnish equipment when so altered without reference to illustrations or specifications used. Western Products or the vehicle manufacturer may require or recommend optional equipment for spreaders. Do not exceed vehicle ratings with a spreader. Western Products offers a limited warranty for all equipment and accessories. See separately printed page for this important information. The following are registered (®) trademarks of Douglas Dynamics, LLC: Striker®, WESTERN®.

Printed in U.S.A..